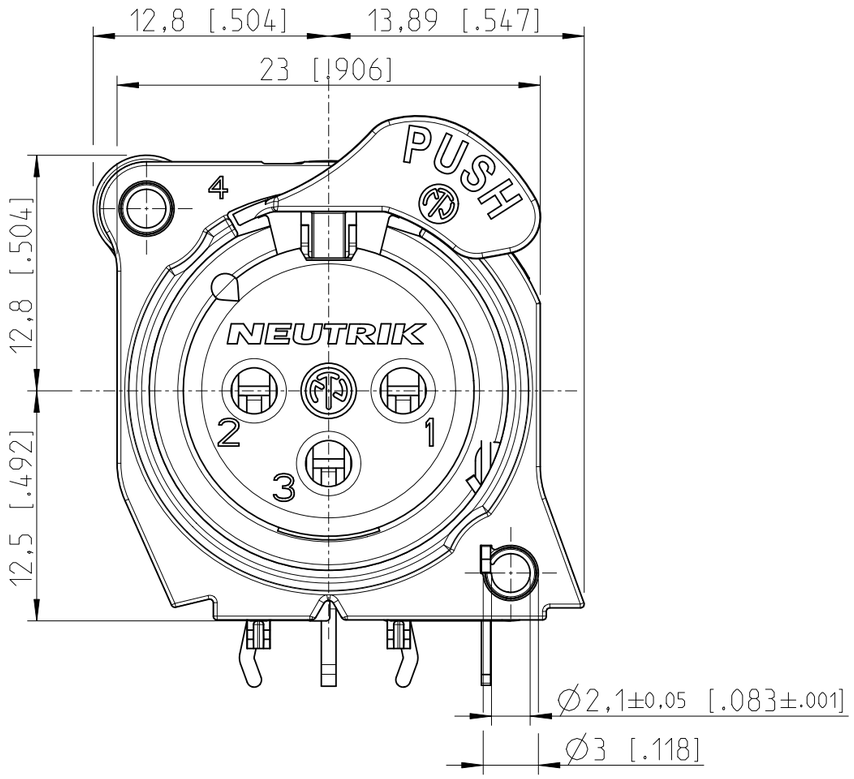

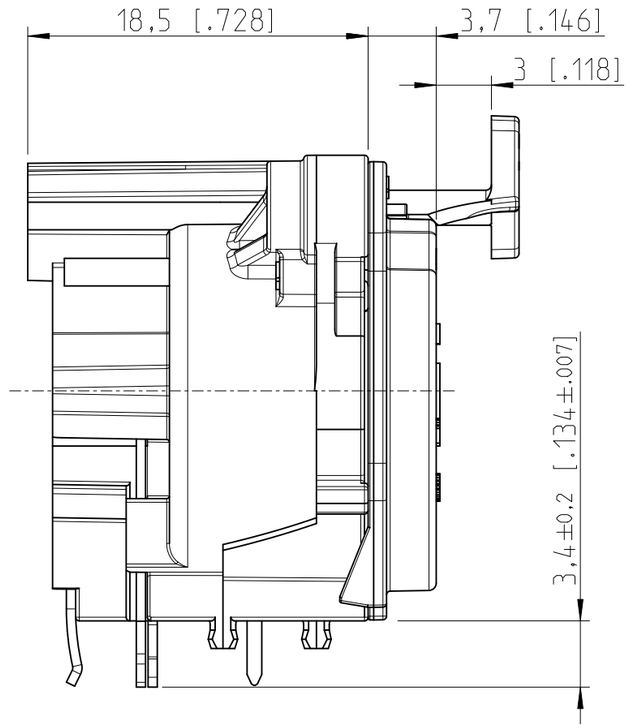

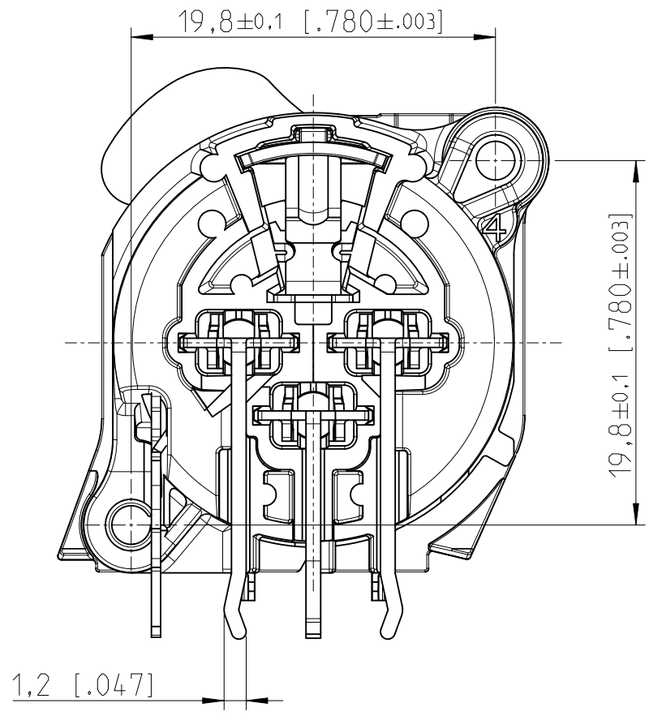

Frontplattenausschnitt (Rückseite)
Panel cut out (rear side)

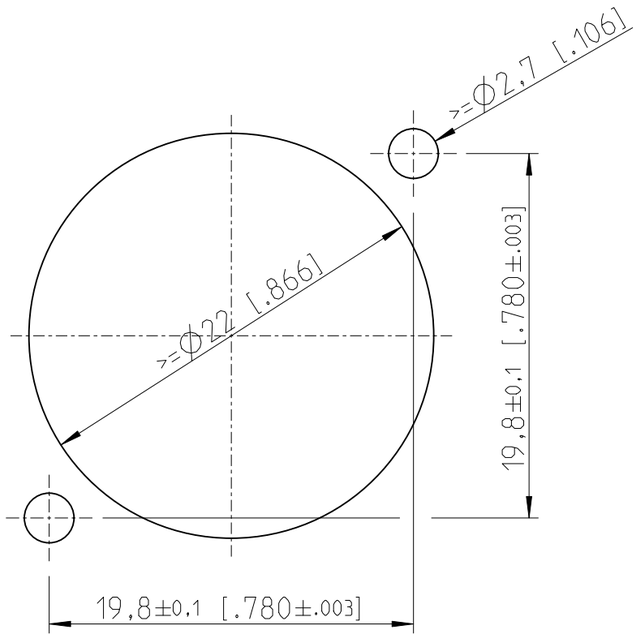

Print-Bohrplan (Bestückungsseite)
PCB-Layout (component side)

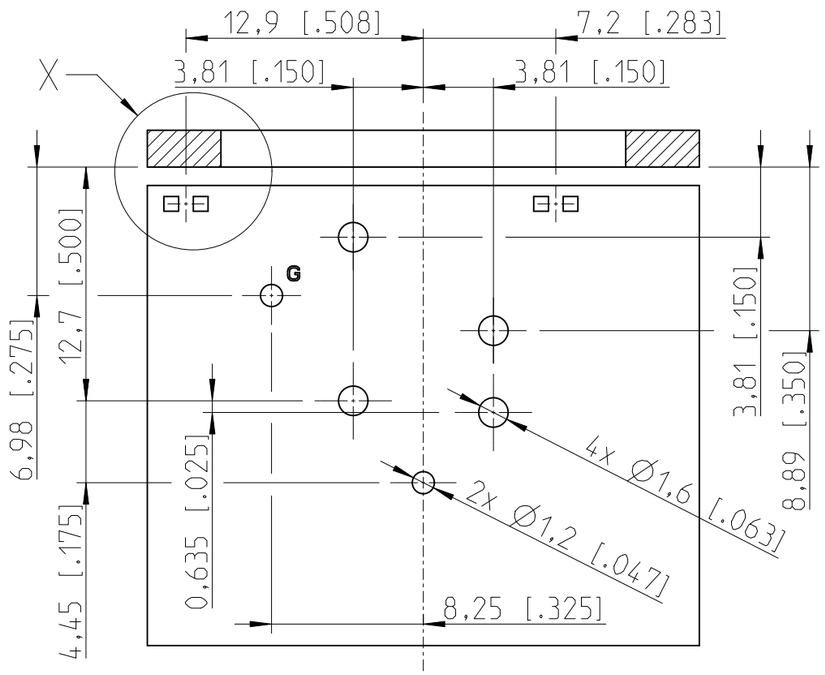

Detail X
5:1

LED size: 0603 (max height: 0.8mm)
Recommended solder pad layout:

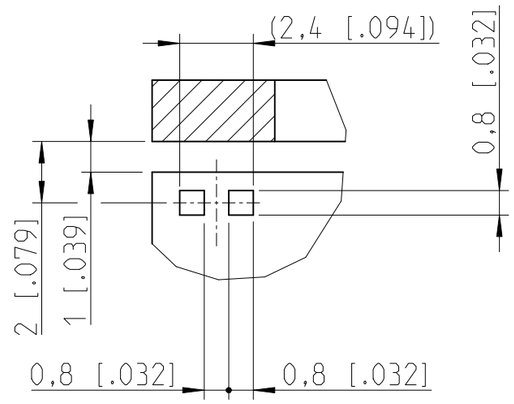

Sheet Number 1/1	Projection	Scale 3:1	Format A3	Tolerancing ISO 2768-mK	
ECN Number	-		Created	25.10.2021	Zechmann K.
Description ST-NC3FAH2-LR-DAE			Modified	n.a.	n.a.
			Approved		
			Status		
NEUTRIK	3D Model ID 30009279		Document ID 20003635		Revision –

Copyright © Neutrik AG / Im alten Riet 143 / 9494 Schaan / Liechtenstein
Refer to protection notice ISO 16016.